KOHLER®

LYRIC™

SELF-RIMMING KITCHEN SINK

K-3288

Features

- *19 gauge stainless steel*
- *Self-rimming*
- *Single compartment*
- *Includes installation hardware*
- *4-hole (-4) or 3-hole (-3)*
- *25″ (63.5 cm) x 22″ (55.9 cm)*

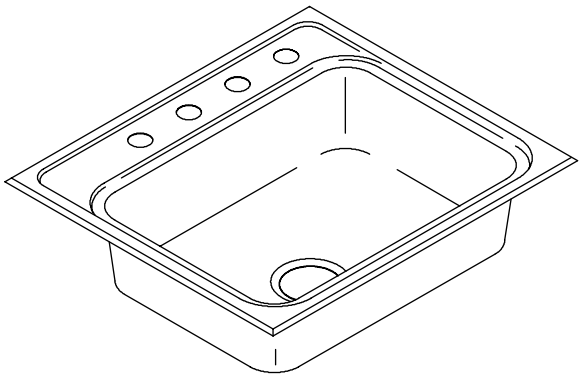

Codes/Standards Applicable

Specified model meets or exceeds the following:

- *ASME A112.19.3*
- *IAPMO/UPC*
- *CSA B45*

Colors/Finishes

- NA: None applicable

Accessories:

- CP: Polished Chrome
- NA: None applicable
- Other: Refer to Price Book for additional colors/finishes

Specified Model

Model	Description	Colors/Finishes	
K-3288-4	4-hole sink	❑ NA	
K-3288-3	3-hole sink	❑ NA	
Optional Accessories			
K-3293	Hardwood cutting board	❑ NA	
K-8801	Duostrainer® sink strainer	❑ CP	❑ Other_____

Product Specification

The self-rimming kitchen sink shall be 25″ (63.5 cm) in length and 22″ (55.9 cm) in width. Sink shall be made of 19 gauge stainless steel. Sink shall be single compartment. Sink shall be 4-hole (-4) or 3-hole (-3). Sink shall include installation hardware. Sink shall be Kohler Model K-3288-_____.

USA: 1-800-4-KOHLER
Canada: 1-800-964-5590
kohler.com

LYRIC™

Technical Information

Fixture*:	
Basin area	21″ (53.3 cm) x 15″ (38.1 cm)
Water depth	7″ (17.8 cm)
Drain hole	3-5/8″ (9.2 cm) D.
Faucet holes	1-7/16″ (3.7 cm) D.
*Approximate measurements for comparison only.	

Included components:	
Fastener pack	1023180

Installation Notes

Install this product according to the installation guide.

Cutout is 24-1/2″ (62.2 cm) x 21-1/2″ (54.6 cm) with 1/2″ (1.3 cm) radius corners.

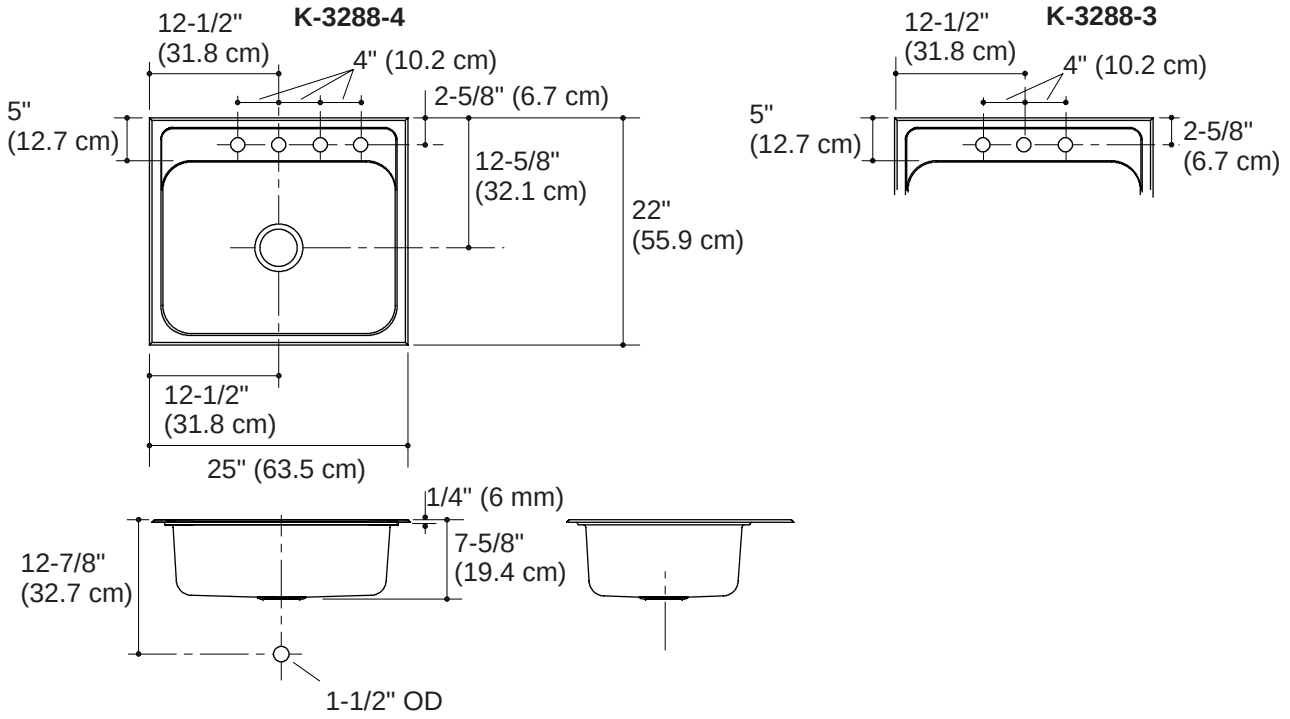

Product Diagram

THE BOLD LOOK OF KOHLER®