KOHLER FAUCETS

PINSTRIPE®

SHOWER FAUCET TRIM
K-T13134
ALSO K-T13135

Features

- *Metal construction*
- *Available with cross or lever handles*
- *For use with non-diverter valve*
- *Complements Pinstripe® Suite*

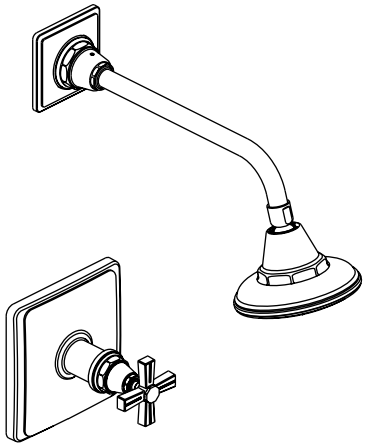

Codes/Standards Applicable

Specified model meets or exceeds the following:

- *ASME A112.18.1/CSA B125.1*

Colors/Finishes

- CP: Polished Chrome
- Other: Refer to Price Book for additional colors/finishes
- NA: None applicable

Specified Model

Model	Description		Colors/Finishes	
K-T13134-3A	Shower trim with plain cross handles	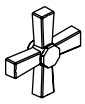	❑ CP	❑ Other ____
K-T13135-3A	Valve trim with plain cross handles		❑ CP	❑ Other ____
K-T13134-3B	Shower trim with grooved cross handles	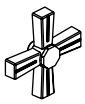	❑ CP	❑ Other ____
KT-13135-3B	Valve trim with grooved cross handles		❑ CP	❑ Other ____
K-T13134-4A	Shower trim with plain lever handles		❑ CP	❑ Other ____
K-T13135-4A	Valve trim with plain lever handles		❑ CP	❑ Other ____
K-T13134-4B	Shower trim with grooved lever handles		❑ CP	❑ Other ____
KT-13135-4B	Valve trim with grooved lever handles		❑ CP	❑ Other ____

Product Specification

The shower faucet trim shall be made of metal construction. Product shall be available with cross or lever handles. Shower trim is for use with a non-diverter valve. Product shall complement the Pinstripe Suite. Faucet trim shall be K-_____-_____-_____ and Rite-Temp pressure-balancing valve shall be K-_____-_____-NA.

USA/Canada: 1-800-4KOHLER
(1-800-456-4537)
www.kohler.com

PINSTRIPE®

Required Accessories		
K-304-*	Rite-Temp® valve **OR**	❑ NA
K-2971-KS	HiFlow Rite-Temp valve with stops **OR**	❑ NA
* For a complete listing of all the Rite-Temp valves, refer to the K-304-* Specification Sheet or Roughing-In Sheet.		

Optional Accessories				
73418	Deep rough-in kit		❑ NA	
88526	HiFlow Rite-Temp® thin wall installation kit	❑ CP		❑ Other ____

Installation Notes

Install this product according to the installation guide.

NOTICE: Risk of product damage. Long screws, for installing trim, can damage the K-2971-KS valve. Consult the trim installation guide to verify if the thin wall installation kit (88526) is needed.

Avoid cross-flow conditions. Do not install shut-off device on either valve outlet.

Cap shower outlet if deck-mount spout, diverter, or handshower is connected to spout outlet.

Install straight pipe or tube drop of 7″ (17.8 cm) to 18″ (45.7 cm) with single elbow between valve and wall-mount spout.

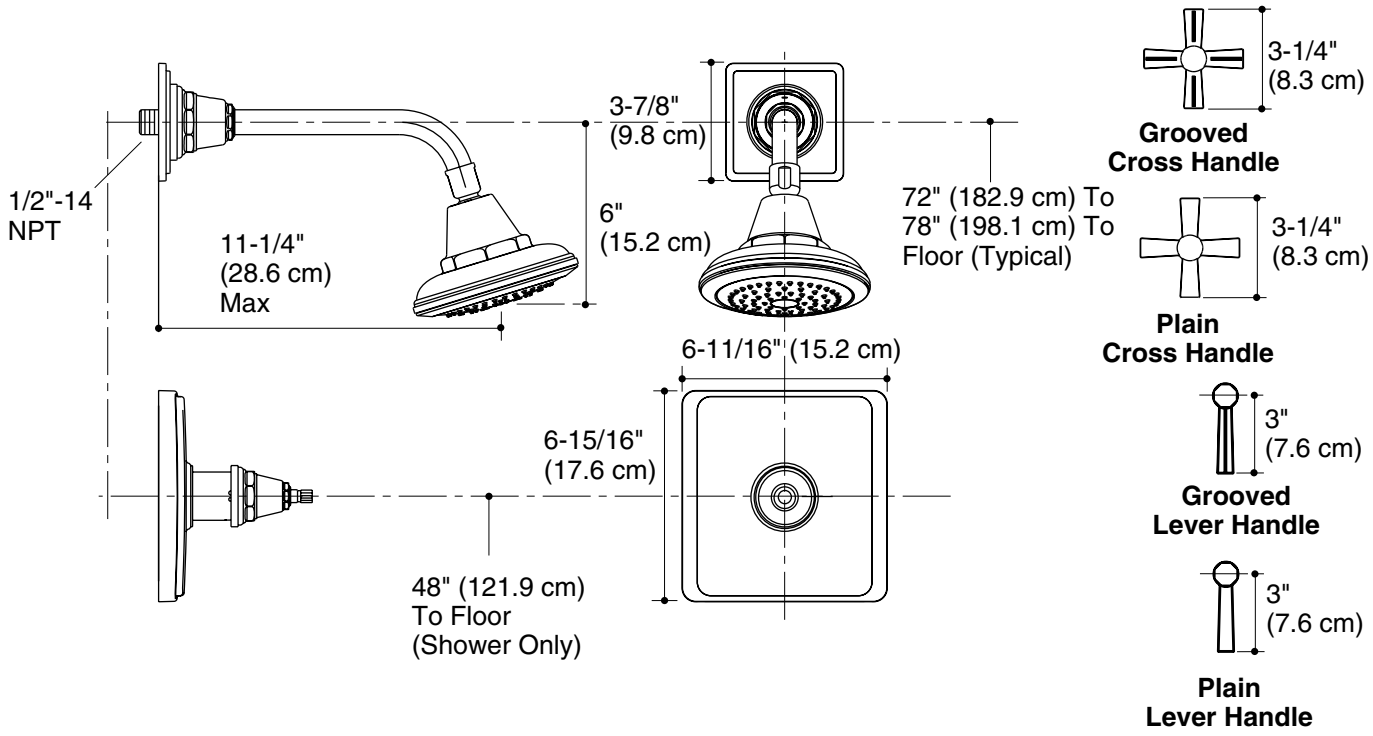

Product Diagram

THE BOLD LOOK OF KOHLER®