KOHLER®

# Roughing-In

**K-2817, K-2819-P5**
**PARADOX ™**
**UNDERCOUNTER LAVATORY BASIN AND PANEL**

## Product Information

| Applicable product: | |
|---|---|
| Undercounter lavatory basin | K-2817 |
| Panel | K-2819-P5 |
| Lavatory is ADA compliant when installed according to ADA guidelines. **ADA** | |

| Fixture*: | |
|---|---|
| Basin area | 20″ (50.8 cm) x 12″ (30.5 cm) |
| Water depth | 1-5/8″ (4.1 cm) |
| Drain hole | 1-3/4″ (4.4 cm) D. |
| * Approximate measurements for comparison only. | |

| Required accessories: | |
|---|---|
| Grid drain | K-7715 |

| Recommended accessories: | |
|---|---|
| Falling Water® angular wall-mount faucet **OR** | K-T197, K-T199 |
| Falling Water® curved wall-mount faucet **OR** | K-T196, K-T198 |
| Stillness® widespread lavatory faucet | K-942-4 |
| P-Trap | K-9018 |

| Included components: | |
|---|---|
| Adhesive sealant | 81489 |
| Basin clamp assembly | 52047 |
| Cut-out template | 1020957-7 |

## Installation Notes

Install this product according to the installation guide.

Supplied basin clamp assemblies require 1″ (2.5 cm) minimum countertop thickness. Installer must supply anchors for thinner countertops.

Choose a faucet that will provide adequate hand washing clearance and will direct the water stream to the center of the lavatory panel.

Fixture dimensions are nominal and conform to tolerances in ASME Standard A112.19.1.

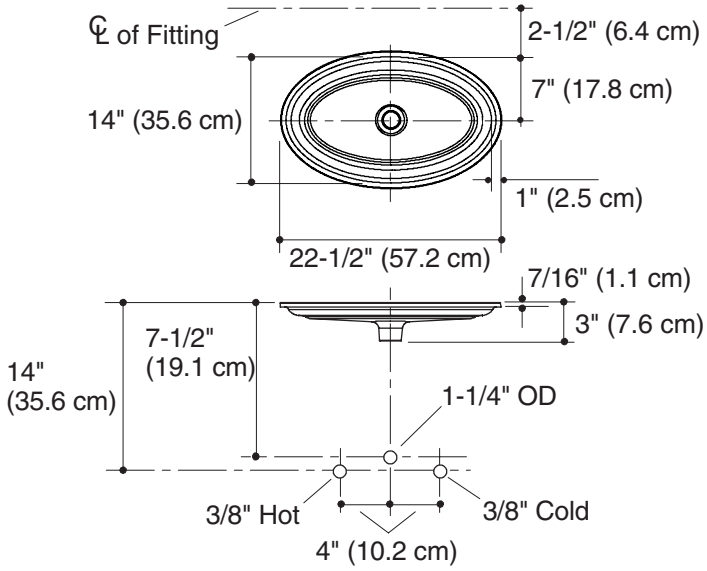


**Standard Installation**

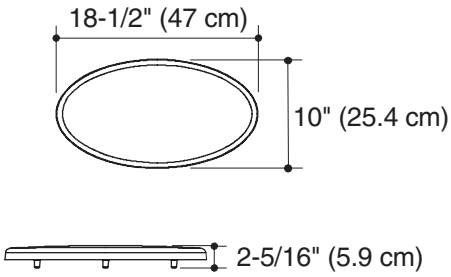


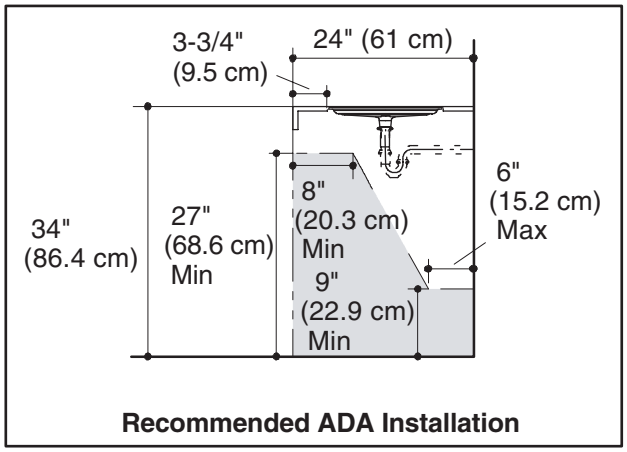


**Recommended ADA Installation**

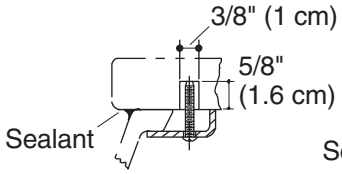


**Marble Installation**

**Wood Installation**